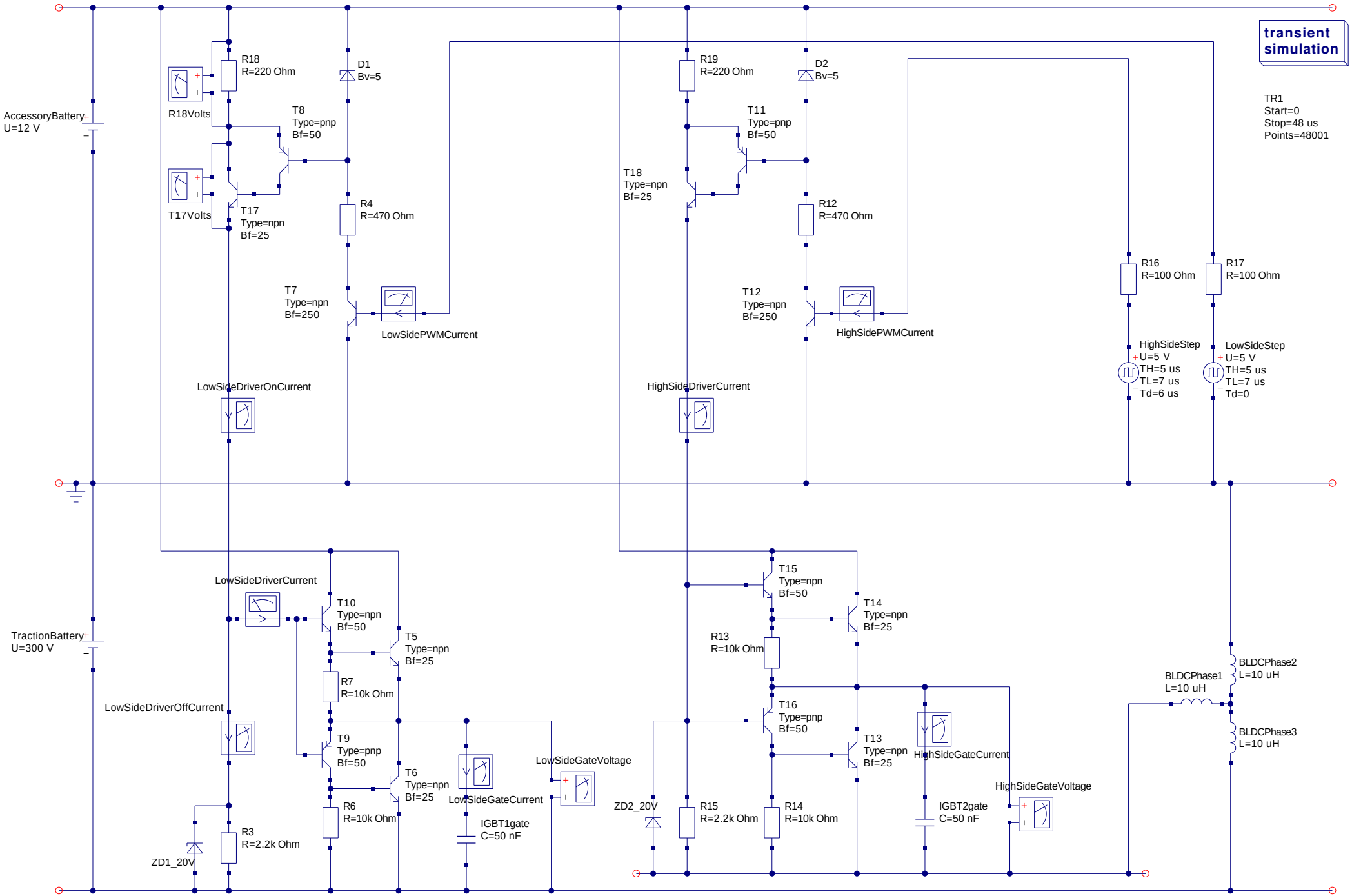
transient simulation
TR1
Start=0
Stop=48 us
Points=48001
AccessoryBattery
U=12 V
R18
R=220 Ohm
R18Volts
D1
Bv=5
T8
Type=pnp
Bf=50
T17Volts
T17
Type=npn
Bf=25
R4
R=470 Ohm
T7
Type=npn
Bf=250
LowSidePWMCurrent
LowSideDriverOnCurrent
R19
R=220 Ohm
D2
Bv=5
T11
Type=pnp
Bf=50
T18
Type=npn
Bf=25
R12
R=470 Ohm
T12
Type=npn
Bf=250
HighSidePWMCurrent
HighSideDriverCurrent
R16
R=100 Ohm
R17
R=100 Ohm
HighSideStep
U=5 V
TH=5 us
TL=7 us
Td=6 us
LowSideStep
U=5 V
TH=5 us
TL=7 us
Td=0
LowSideDriverCurrent
T10
Type=npn
Bf=50
T5
Type=npn
Bf=25
R7
R=10k Ohm
LowSideDriverOffCurrent
T9
Type=pnp
Bf=50
T6
Type=npn
Bf=25
R6
R=10k Ohm
LowSideGateCurrent
IGBT1gate
C=50 nF
LowSideGateVoltage
R3
R=2.2k Ohm
ZD1_20V
TractionBattery
U=300 V
T15
Type=npn
Bf=50
T14
Type=npn
Bf=25
R13
R=10k Ohm
T16
Type=pnp
Bf=50
T13
Type=npn
Bf=25
HighSideGateCurrent
IGBT2gate
C=50 nF
HighSideGateVoltage
ZD2_20V
R15
R=2.2k Ohm
R14
R=10k Ohm
BLDCPhase1
L=10 uH
BLDCPhase2
L=10 uH
BLDCPhase3
L=10 uH