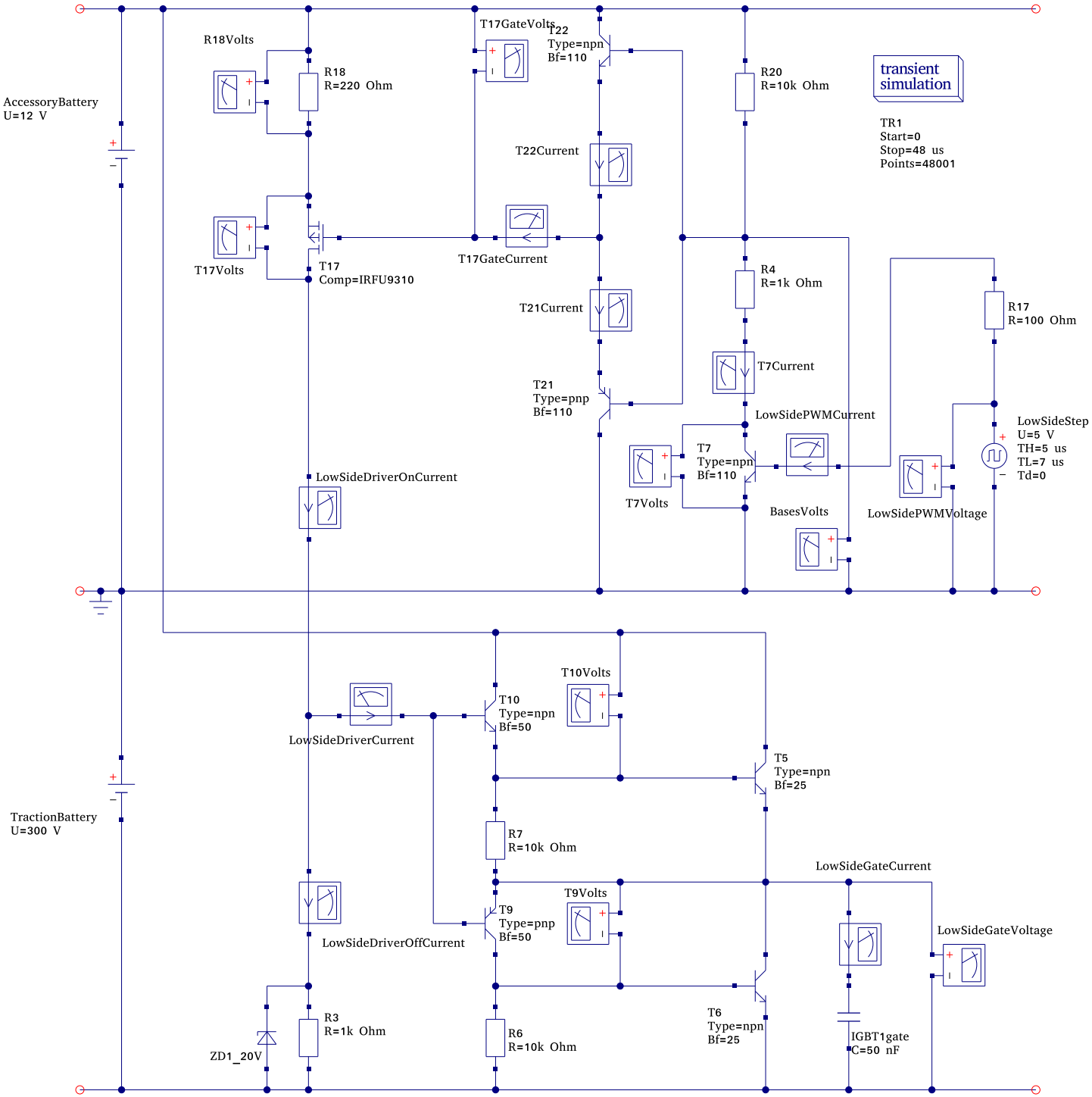
AccessoryBattery
U=12 V
R18Volts
R18
R=220 Ohm
T17GateVolts
T22
Type=npn
Bf=110
R20
R=10k Ohm
transient
simulation
TR1
Start=0
Stop=48 us
Points=48001
T22Current
T17Volts
T17
Comp=IRFU9310
T17GateCurrent
R4
R=1k Ohm
R17
R=100 Ohm
T21Current
T7Current
T21
Type=pnp
Bf=110
LowSidePWMCurrent
LowSideStep
U=5 V
TH=5 us
TL=7 us
Td=0
T7
Type=npn
Bf=110
T7Volts
BasesVolts
LowSidePWMVoltage
LowSideDriverOnCurrent
T10Volts
T10
Type=npn
Bf=50
LowSideDriverCurrent
T5
Type=npn
Bf=25
TractionBattery
U=300 V
R7
R=10k Ohm
LowSideGateCurrent
T9Volts
T9
Type=pnp
Bf=50
LowSideDriverOffCurrent
LowSideGateVoltage
R3
R=1k Ohm
R6
R=10k Ohm
T6
Type=npn
Bf=25
IGBT1gate
C=50 nF
ZD1_20V