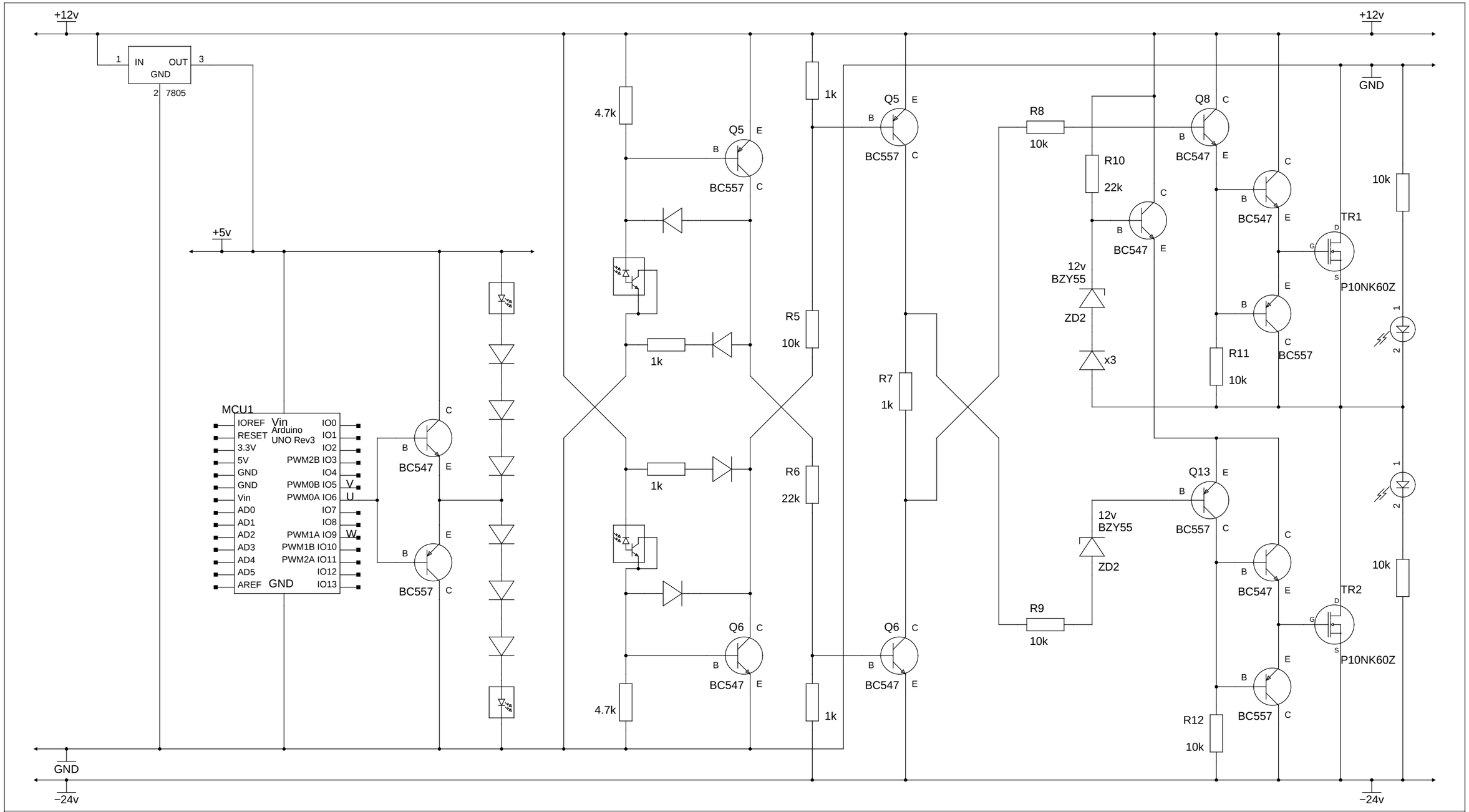

TITLE: Class D PushPull TriState (Low Voltage Test 3) AUTHOR: Graham North CREATED: 14−June−2014 NOTES: ps2pdf −sPAPERSIZE=a3